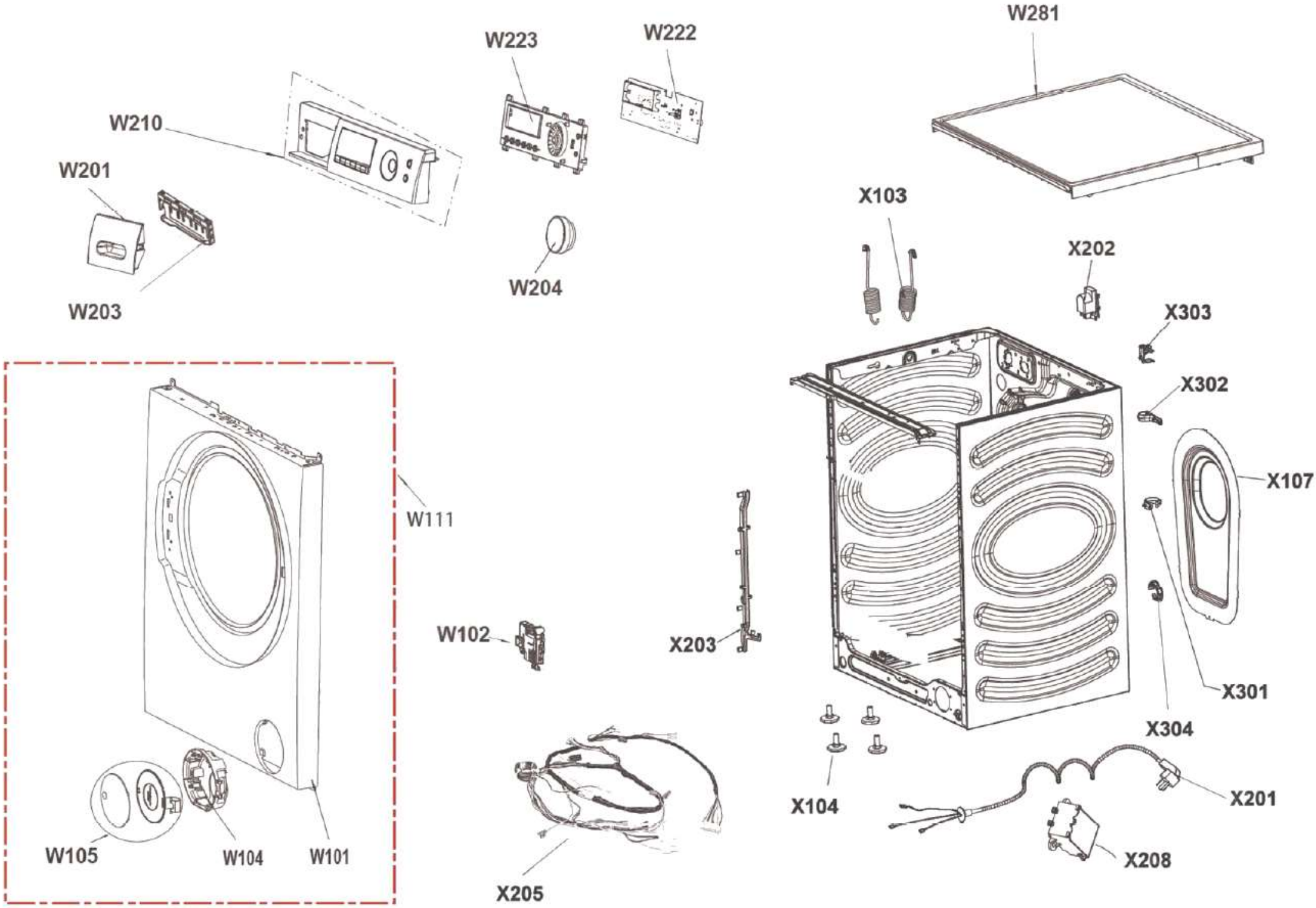
W281
W223
W222
W210
W201
W203
W204
X103
X202
X303
X302
X107
W111
W102
X203
X301
X304
X104
X201
X208
W105
W104
W101
X205

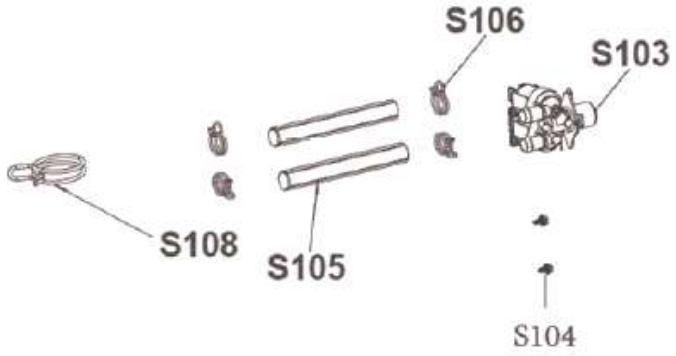
S106
S103
S108
S105
S104

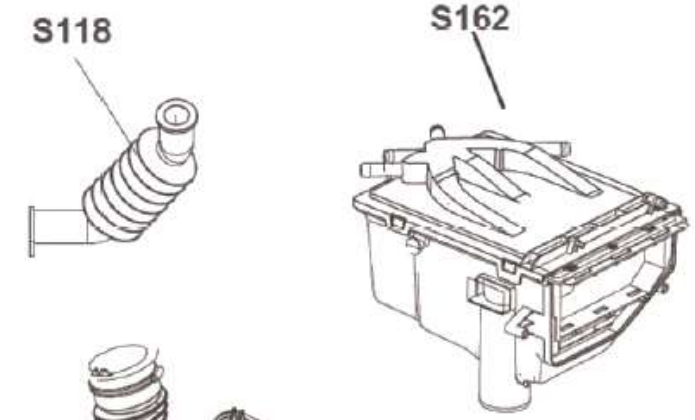
S118
S162

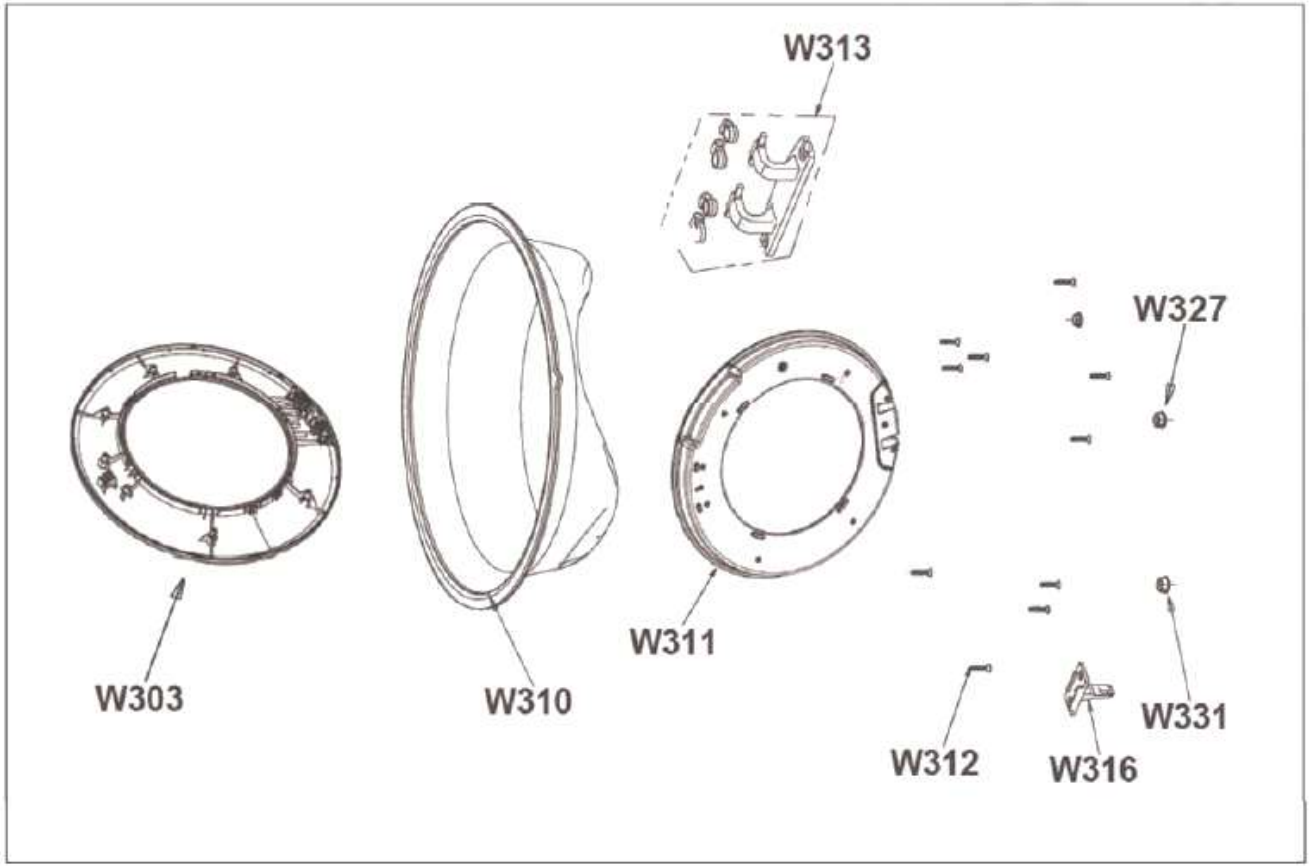
W313
W327
W303
W310
W311
W312
W316
W331

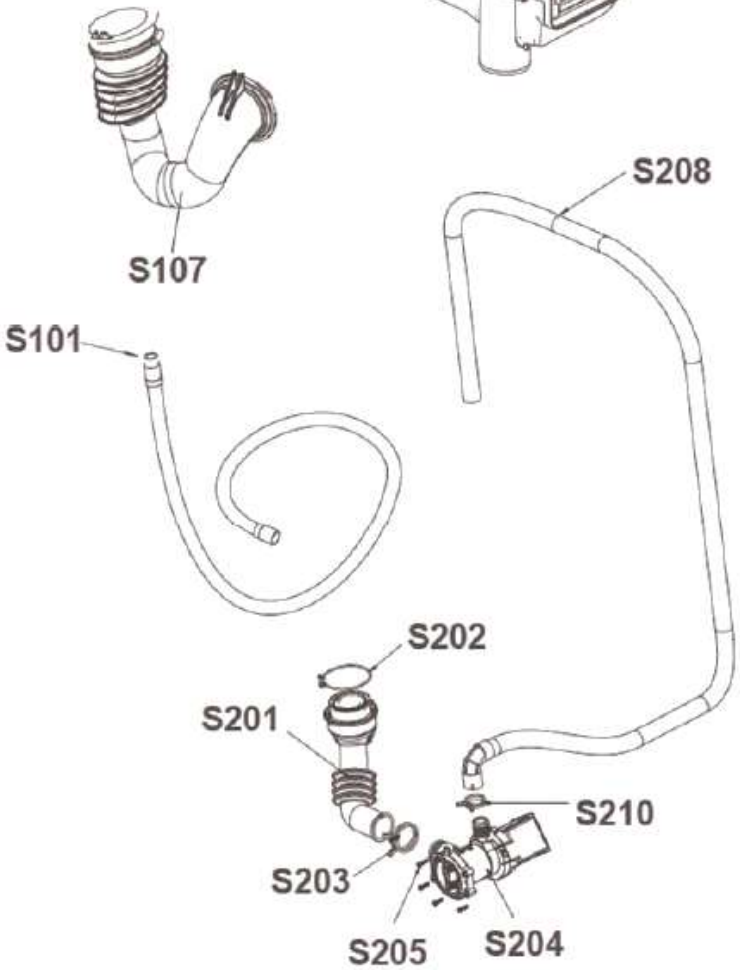
S107
S208
S101
S202
S201
S210
S203
S205
S204

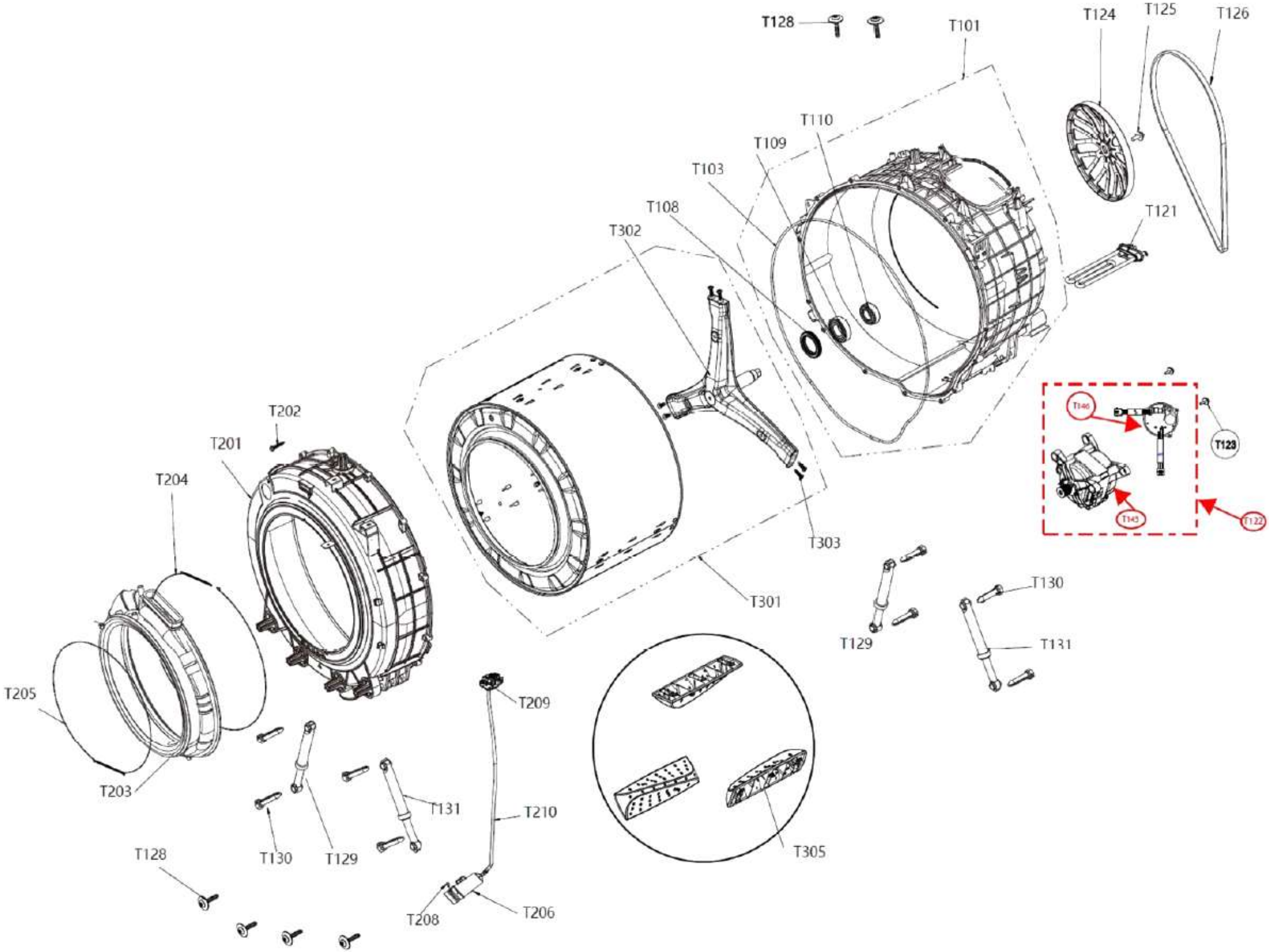
T128
T101
T124
T125
T126
T110
T109
T103
T108
T302
T121
T146
T123
T145
T122
T202
T201
T204
T303
T301
T130
T129
T131
T205
T209
T203
T131
T210
T130
T129
T128
T305
T208
T206